PARA LIGHT ELECTRONICS CO., LTD.
4F, No.1, Lane 93, Chien Yi Road, Chung Ho City, Taipei, Taiwan, R.O.C.
Tel: 886-2-2225-3733 Fax: 886-2-2225-4800
E-mail: para@para.com.tw http://www.para.com.tw

DATA SHEET

PART NO. : A-551UB

REV : A / 1

CUSTOMER'S APPROVAL : _____ DCC : _____

DRAWING NO. : DS-11-04-0066 DATE : 2005-10-07

PACKAGE DIMENSIONS

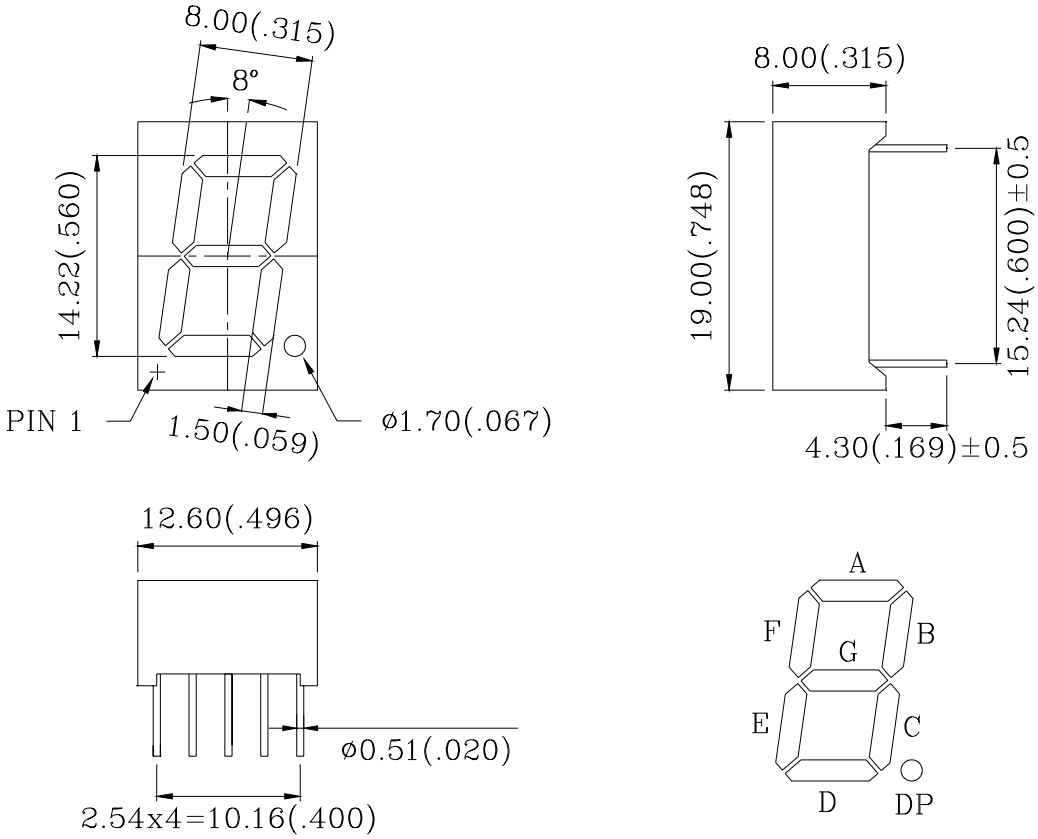

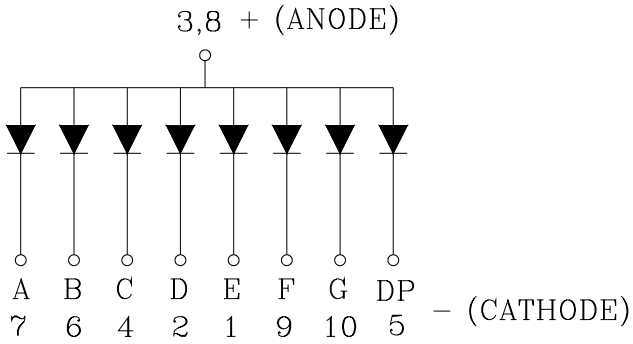

NOTES : 1. All dimensions are in millimeters. (inches)
2. Tolerance is ± 0.25(0.01") unless otherwise specified.
3. We would like to offer you samples and mass production after you confirmed the DS and signed to return us

FEATURES

- ∗ 14.22mm (0.56 inch) DIGIT HEIGHT
- ∗ EXCELLENT CHARACTER APPEARANCE
- ∗ COMMON ANODE
- ∗ I.C. COMPATIBLE
- ∗ LOW POWER CONSUMPTION
- ∗ HIGHLIGHT<400V THE LED CAN WITHSTAND THE MAX STATIC LEVEL WHEN ASSEMBLING OR OPERATION

Raw Material : GaInN/GaN

ABSOLUTE MAXIMUM RATING : (Ta = 25°C)

SYMBOL	PARAMETER	ULTRA BLUE	UNIT
P_{AD}	Power Dissipation Per Segment	40	mW
V_R	Reverse Voltage Per Segment	5	V
I_{AF}	Continuous Forward Current Per Segment	10	mA
I_{PF}	Peak Forward Current Per Segment (Duty－0.1,1KHz)	60	mA
－	Derating Linear From 25°C Per Segment	0.4	mA/°C
Topr	Operating Temperature Range	－35°C to 85°C	
Tstg	Storage Temperature Range	－35°C to 85°C	
Solder Temperature 1/16 inch Below Seating Plane for 3 Seconds at 250°C			

ELECTRO-OPTICAL CHARACTERISTICS : (Ta = 25°C)

SYMBOL	PARAMETER	TEST CONDITION	MIN.	TYP.	MAX.	UNIT
V_F	Forward Voltage , Per Segment	I_F = 20mA		3.5	4.0	V
I_R	Reverse Current , Per Segment	V_R = 5V			100	μA
λ_P	Peak Emission Wavelength	I_F = 20mA		462		nm
λ_D	Dominant Wavelength	I_F = 20mA		467		nm
$\Delta\lambda$	Spectral Line Half－Width	I_F = 20mA		30		nm
I_V	Luminous Intensity Per Segment	I_F = 10mA	11.5	28.0		mcd

BIN CODE (I_F = 10mA)

Dice \ Bin	I	J	K	L	M	N
I_V(mcd)	11.5-16.72	16.73-23.17	23.18-30.86	30.87-42.95	42.96-57.84	57.85-65.0

TOLERANCE IS: 3%

FORWARD CURRENT Vs.
FORWARD VOLTAGE

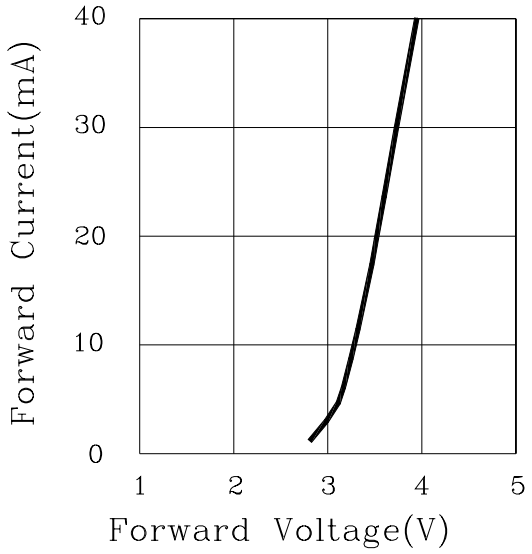

RELATIVE INTENSITY Vs.
FORWARD CURRENT

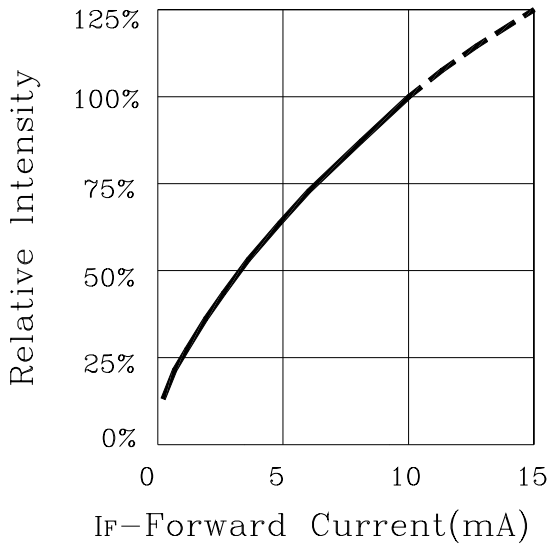

FORWARD CURRENT
DERATING CURVE

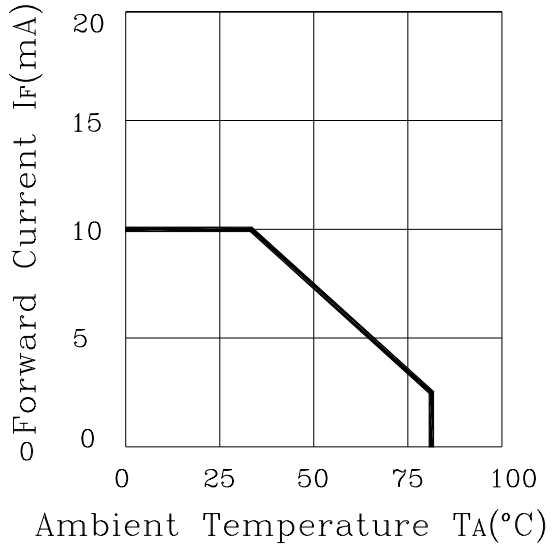

LUMINOUS INTENSITY Vs.
AMBIENT TEMPERATURE

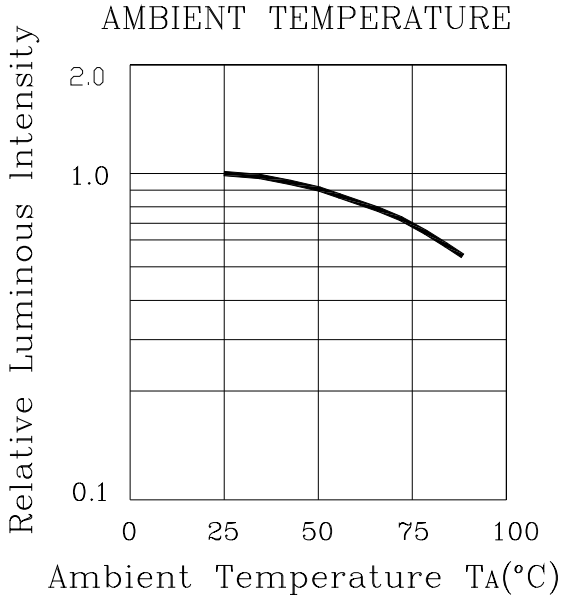

0.56 INCH SINGLE DIGIT DISPLAY

A-551UB

REV:A / 1

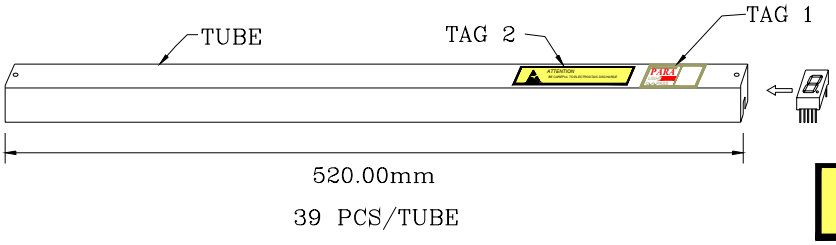

TAG 1

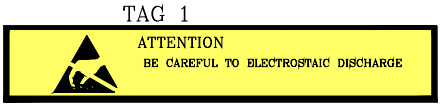

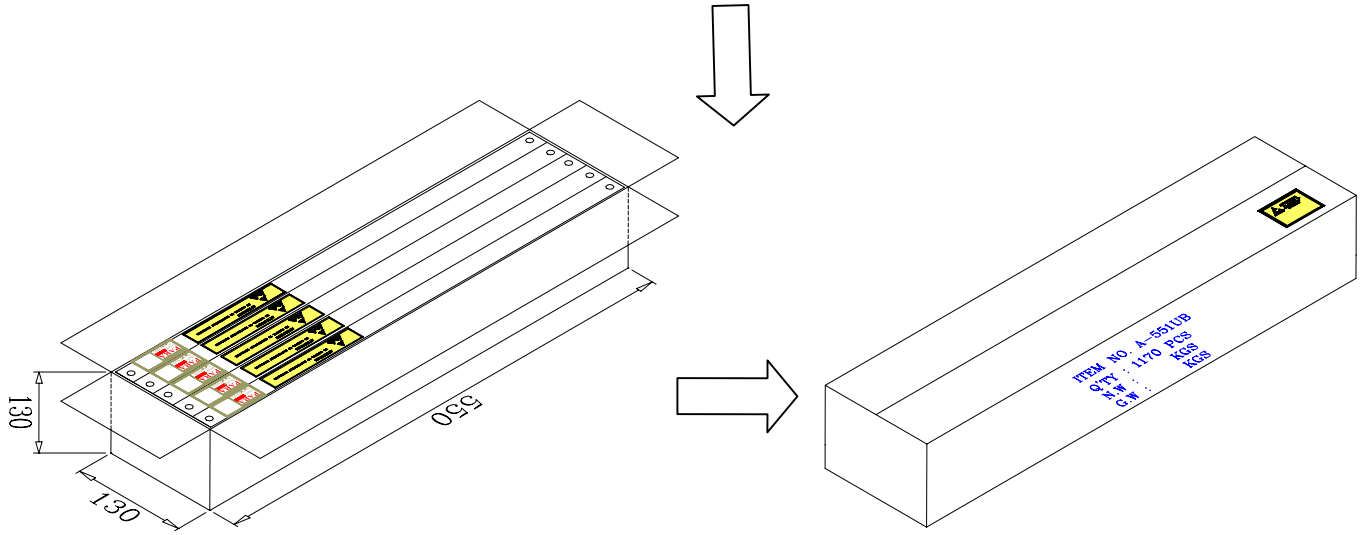

30 TUBE/BOX

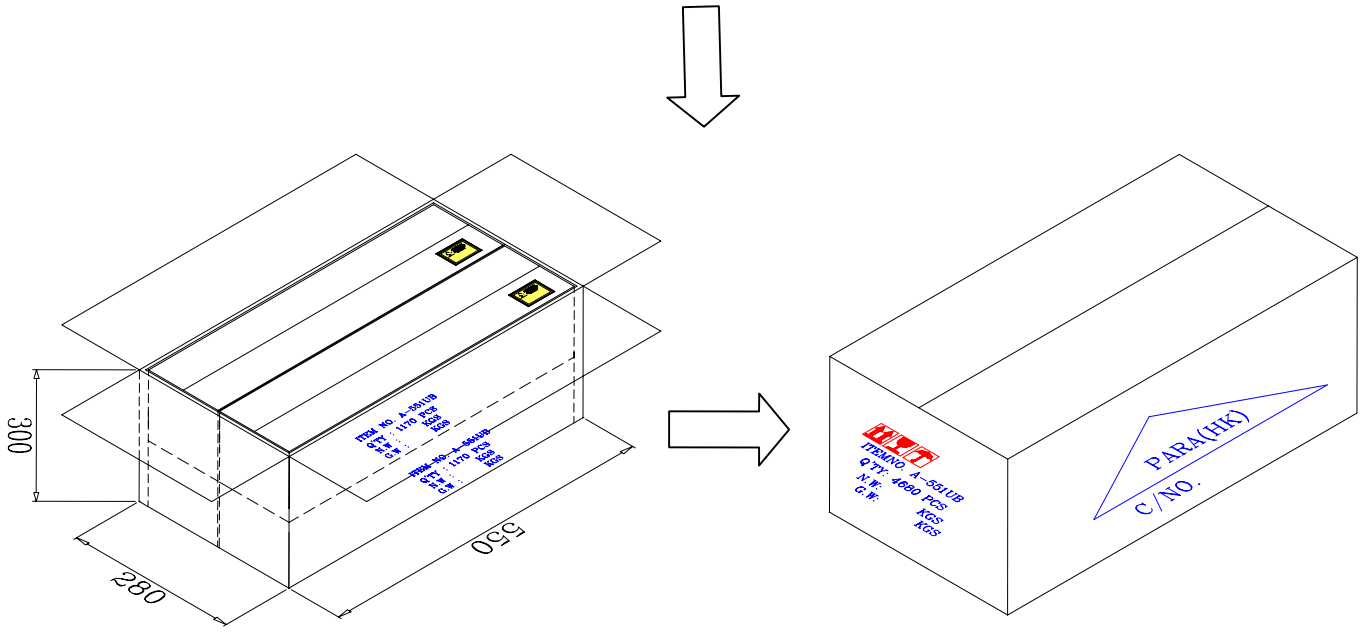

4 BOX/CTN

Experiment Item:

Item	Test Condition Display	Reference Standard
OPERATION LIFE	Ta： 25 ± 5℃ IF： 10 mA PER SEGMENT TEST TIME： 168HRS（-24HRS，+24HRS） 500HRS（-24HRS，+24HRS） 1000HRS（-24HRS，+72HRS）	MIL-STD-750：1026 MIL-STD-883：1005 JIS C 7021：B-1
HIGH TEMPERATURE HIGH HUMIDITY STORAGE	Ta： 65℃ ± 5℃ RH： 90～95%RH TEST TIME：240HRS±2HRS	MIL-STD-202：103B JIS C 7021 ：B-1
TEMPERATURE CYCLING	85℃～25℃～-35℃～25℃ 30min 5min 30min 5min 10CYCLES （COB：Thot：65℃ Tcold：-25℃）	MIL-STD-202：107D MIL-STD-750：1051 MIL-STD-883：1010 JIS C 7021 ：A-4
THERMAL SHOCK	85℃ ± 5℃～-35℃ ± 5℃ 10min 10min 10CYCLES （COB：Thot：65℃ Tcold：-25℃）	MIL-STD-202：107D MIL-STD-750：1051 MIL-SYD-883：1011
SOLDER RESISTANCE	T，sol：250℃ ± 5℃ DWELL TIME：5 ± I sec	MIL-STD-202：210A MIL-STD-750-2031 JIS C 7021：A-1
SOLDERABILITY	T，sol：230℃ ± 5℃ DWELL TIME：5 ± I sec	MIL-STD-202：208D MIL-STD-750：2026 MIL-STD-883：2003 JIS C 7021 ：A-2

•SOLDERING

METHOD	SOLDERING CONDITIONS	REMARK
DIP SOLDERING	Bath temperature: 260 max Immersion time: within 5 sec	• Solder no closer than 2mm from the base of the package • Using soldering flux," RESIN FLUX" is recommended.
SOLDERING IRON	Soldering iron: 30W or smaller Temperature at tip of iron: 260℃ or lower Soldering time: within 5 sec.	• During soldering, take care not to press the tip of iron against the PIN. (To prevent heat from being transferred directly to the PIN.)

1) When soldering the PIN of Display in a jig that the package is fixed with a panel (See flg.1), be careful not to stress the PIN with iron tip. When soldering Display in a condition that the package is fixed with a panel, be careful not to cling and stress the surface of Display on the panel to avoid damaging the Display.

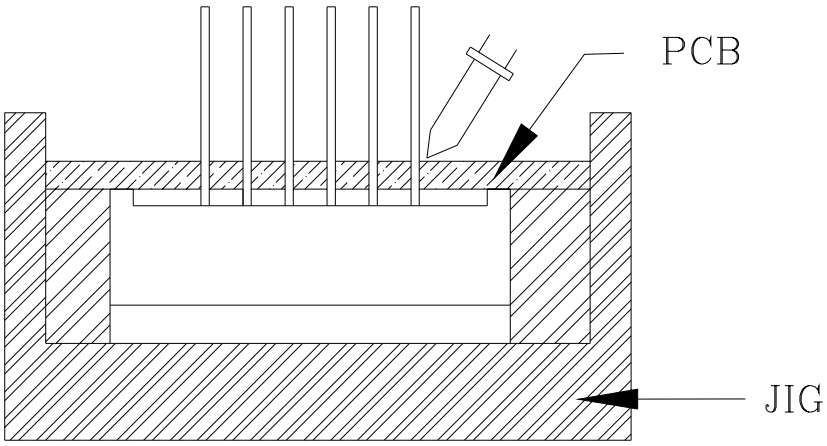

Fig.1

Regarding solution in the tinning oven for product-tinning, compound sub-solution made of tin & copper and sliver is proposed with the temperature of Celsius 260. The proportion of the alloyed solution is tin 95.5: copper 3.5: silver 0.5 by percentage. The time of tinning is constantly 3 seconds.

2) Similarly, when a jig is used to solder the Display to PC board, take care as much as possible to avoid steering the PIN (See Fig.2).

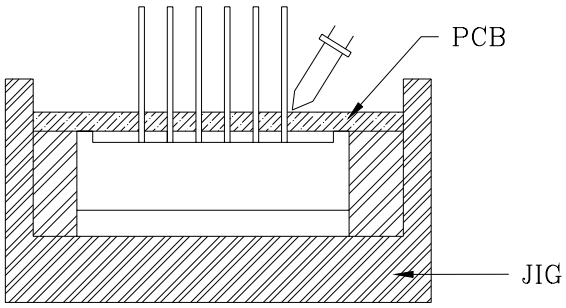

Fig.2

3) Repositioning after soldering should be avoided as much as possible. If inevitable, be sure to preserve the soldering conditions with irons stated above: select a best-suited method that assures the least stress to the Display.
4) PIN cutting after soldering should be performed only after the Display temperature has returned to normal temperature.

•LED MOUNTING METHOD

1) When mounting the Display by using a case, as shown Fig.3, ensure that the mounting holds on the PC board match the pitch of the PIN correctly-tolerance of dimensions of the respective components including the Display should be taken into account especially when designing the case, PC board, etc. to prevent pitch misalignment between the PIN and board holes, the diameter of the board holes should be slightly larger than the size of the PIN. Alternatively, the shape of the holes should be made oval. (See Fig.3)

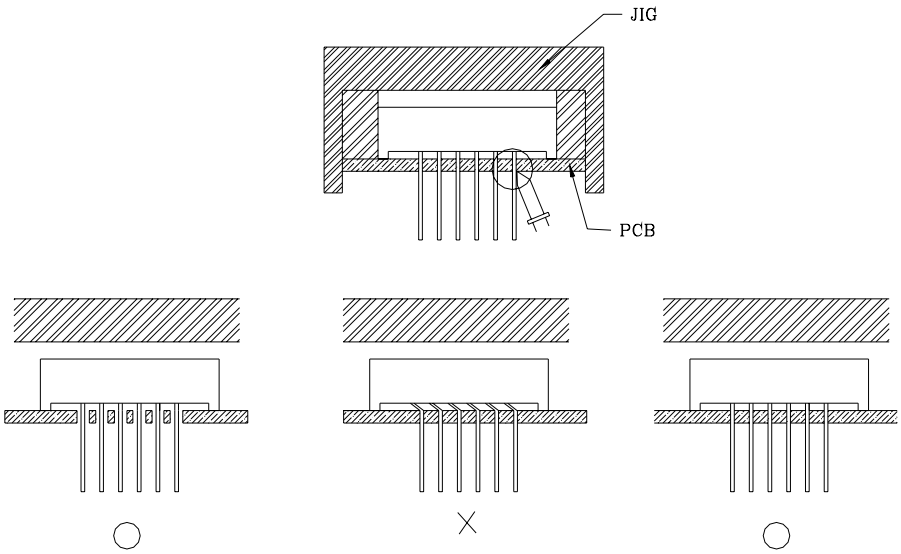

Fig.3

2) Use Display with holder made of resin (Fig.4) to position the PIN.

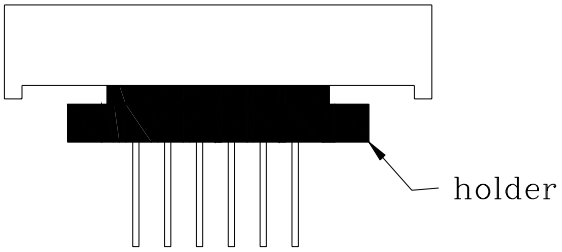

Fig.4

•FORMED LEAD

1) The PIN should be bent at a point located at least 2mm away from the package. Bending should be performed with base fixed means of a jig or pliers (Fig.5)

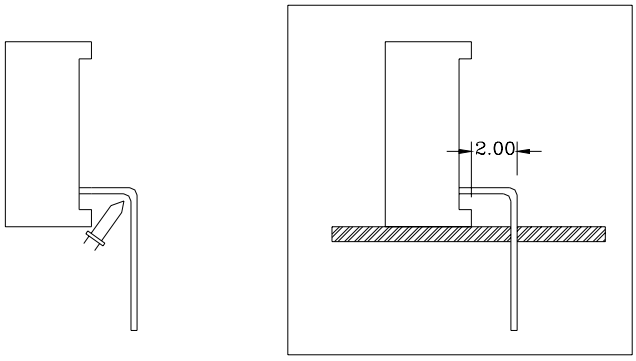

Fig.5

2) Forming PIN should be carried our prior to soldering and never during or after soldering.
3) Form the PIN to ensure alignment between the PIN and the hole on board, so that stress against the Display is prevented. (Fig.6)

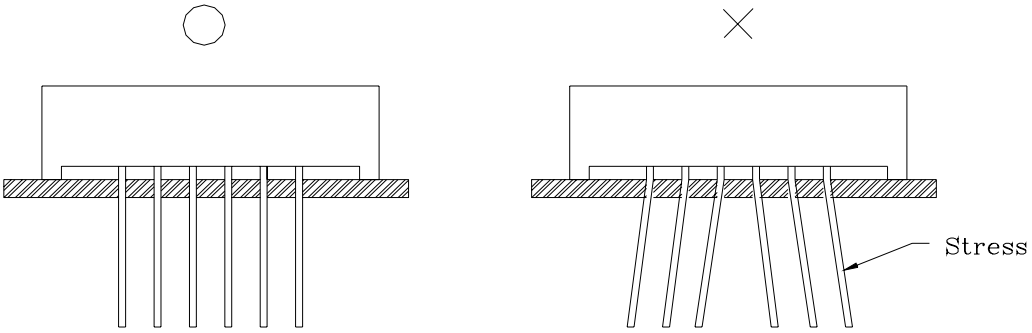

Fig.6

•LEAD STRENGTH

1) Bend strength
   Do not bend the PIN more than twice. (Fig.7)

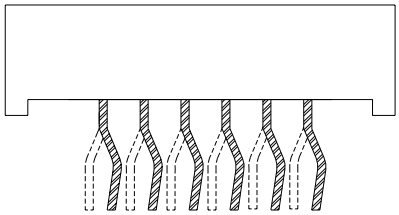

Fig.7

2) Tensile strength (@Room Temperature)
   If the force is 1kg or less, there will be no problem. (Fig.8)

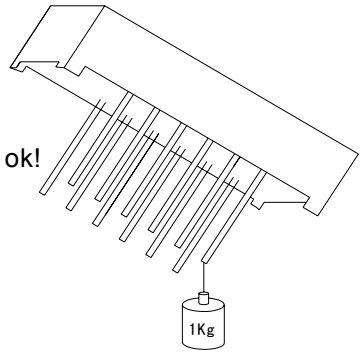

Fig.8

•HANDLING PRECAUTIONS

Although rigid against vibration, the Display may damaged or scratched if dropped. So take care when handling.

•CHEMICAL RESISTANCE

1) Avoid exposure to chemicals as it may attack the Display surface and cause discoloration.
2) When washing is required, refer to the following table for the proper chemical to be sued.

SOLVENT	ADAPTABILITY
Freon TE	⊙
Chlorothene	╳
Isopropyl Alcohol	⊙
Thinner	╳
Acetone	╳
Trichloroethylene	╳

⊙--Usable ╳--Do not use.

• HEAT GENERATION

1) The Display should be stored at 30℃ or less and 70% RH or less after being shipped from PARA and the storage life limits are 3 months.
2) PARA Display lead frames are comprised of a stannum plated iron alloy. The silver surface may be affected by environments which contain corrosive gases and so on. Please avoid conditions which may cause the Display to corrode, tarnish or discolor. This corrosion or discoloration may cause difficulty during soldering operations. It is recommended that the Display be used as soon as possible.
3) Please avoid rapid transitions in ambient temperature, especially, in high humidity environments where condensation can occur.

• HEAT GENERATION

1) Thermal design of the end product is of paramount importance. Please consider the heat generation of the Display when making the system design. The coefficient of temperature increase per input electric power is affected by the thermal resistance of the circuit board and density of Display placement on the board, as well as other components. It is necessary to avoid intense heat generation and operate within the maximum ratings given in this specification.
2) The operating current should be decided after considering the ambient maximum temperature of Display .

•OTHERS

1) Care must be taken to ensure that the reverse voltage will not exceed the absolute maximum rating when using the Display with matrix drive.
2) Flashing lights have been known to cause discomfort in people; you can prevent this by taking precautions during use. Also, people should be cautious when using equipment that has had Display incorporated into it.
3) The Display described in this brochure are intended to be used for ordinary electronic equipment (such as office equipment, communications equipment, measurement instruments and household appliances). Consult PARA's sales staff in advance for information on the applications in which exceptional quality and reliability are required , particularly when the failure or malfunction of the Display may directly jeopardize life or health (such as for airplanes, aerospace, submersible repeaters, nuclear reactor control systems, automobiles, traffic control equipment, life support systems and safety devices).

4) User shall not reverse engineer by disassembling or analysis of the Display without having prior written consent from PARA. When defective Display are found, the User shall inform PARA directly before disassembling or analysis.
5) The formal specifications must be exchanged and signed by both parties before large volume purchase begins.
6) The appearance and specifications of the product may be modified for improvement without notice.

• STATIC ELECTRICITY

1) Static electricity or surge voltage damages the Display.
   It is recommended that a wrist band or an anti-electrostatic glove be used when handling the Display.
2) All devices, equipment and machinery must be properly grounded. It is recommended that measures be taken against surge voltage to the equipment that mounts the Display.
3) When inspecting the final products in which Display were assembled, it is recommended to check whether the assembled Display are damaged by static electricity or not. It is easy to find static-damaged Display by a light-on test or a VF test at a lower current (below 1mA is recommended).
4) Damaged Display will show some unusual characteristics such as the leak current remarkably increases, the forward voltage becomes lower, or the Display do not light at the low current .
   Criteria : (VF>2.0V at IF=0.5mA)